PARTS CATALOGUE / TECHNICAL GUIDE

Cal. 3M22A

[SPECIFICATIONS]

Item \ Cal. No.		3M22A
Movement		 (x 1.0)
Movement size	Outside diameter	ø24.0 mm
	Casing diameter	ø23.3 mm
	Height	4.2 mm
Time indication		3 hands
Driving system		Step motor (1 pc.)
Additional mechanism		• Date calendar • Instant setting device for date calendar • Power reserve indicator • Train wheel setting device • Electronic circuit reset switch • Overcharge prevention function
Loss/gain		Monthly rate at normal temperature range: less than 15 seconds
Regulation system		Nil
Measuring gate by quartz tester		Use 10-second gate.
Power supply	Power generator	Automatic generating system
	Capacitor	SL621
Operating voltage range		Capacitor voltage: 0.5 ~ 2.3V
Expected life per charge		From 1.55V to stoppage: Approx. 72 hours
Jewels		7 jewels

SEIKO CORPORATION

PARTS CATALOGUE

Cal. 3M22A

Disassembling procedures Figs. : (1) → (50)

Reassembling procedures Figs. : (50) → (1)

Lubricating: **Types of oil** — Moebius A; SEIKO Watch Oil S-6

Oil quantity — Normal quantity; Extremely small

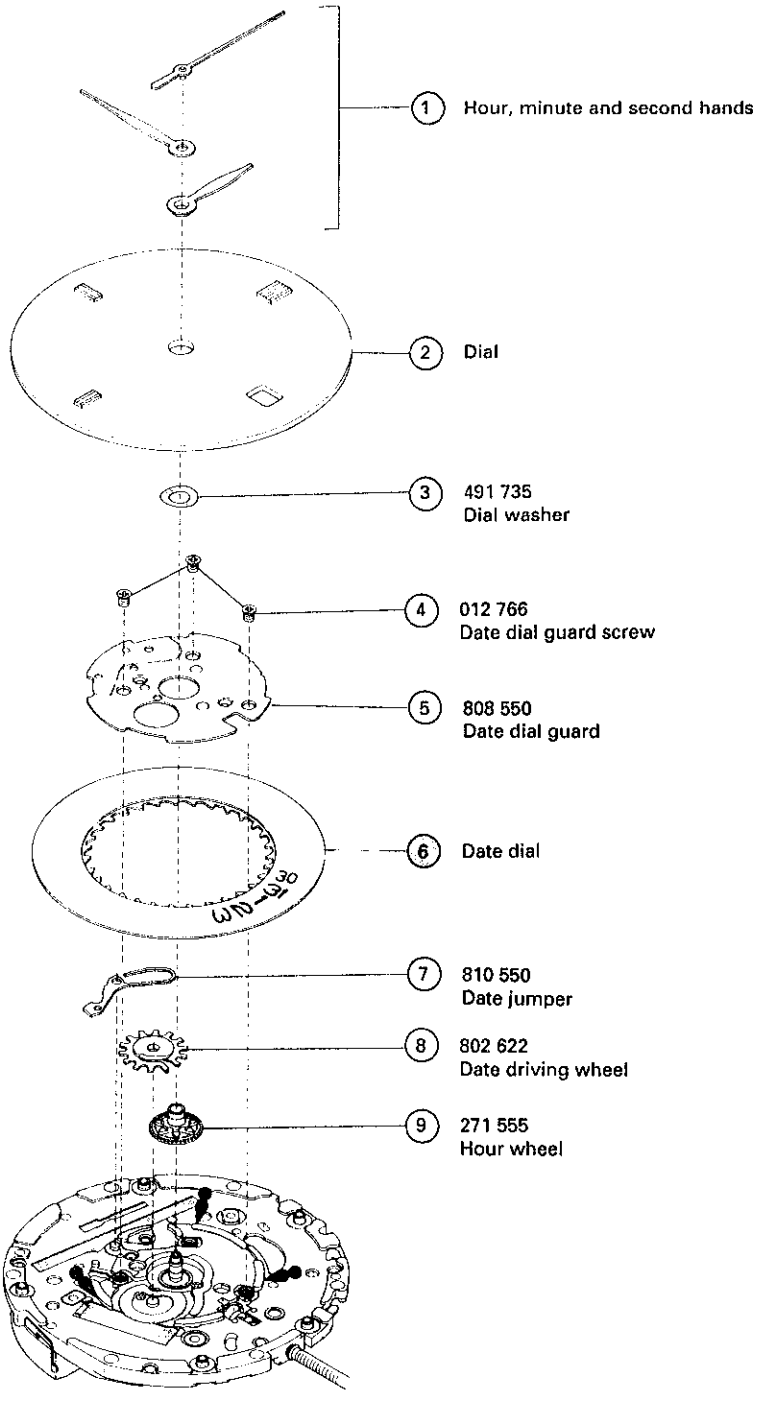

○ ⇨ Please see the remarks on the following pages.

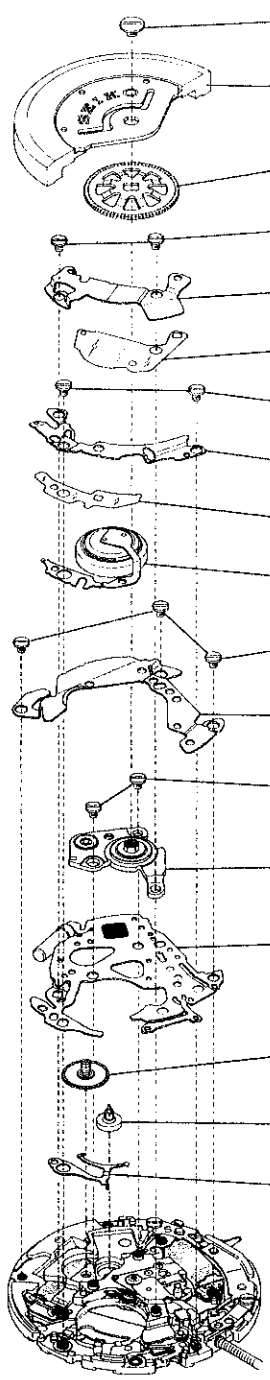

(10) 022 490
Oscillating weight screw

(11) 500 550
Oscillating weight

(12) 1002 550
Oscillating weight wheel

(13) 012 354
Capacitor clamp screw

(14) 4225 551
Capacitor clamp

(15) 4216 555
Insulator for capacitor A

(16) 012 354
Screw for circuit block cover B

(17) 4457 870
Circuit block cover B

(18) 4216 556
Insulator for capacitor B

(19) 3029 011
Capacitor unit

(20) 012 354
Screw for circuit block cover A

(21) 4457 871
Circuit block cover A

(22) 012 354
Screw for oscillating weight bridge

(23) 198 550
Oscillating weight bridge

(24) 4000 675
Circuit block

(25) 1002 551
Intermediate wheel for generating rotor

(26) 4146 561
Generating rotor

(27) 4271 516
Capacitor connection (+)

(●) ⇨ Please see the remarks on the following pages.

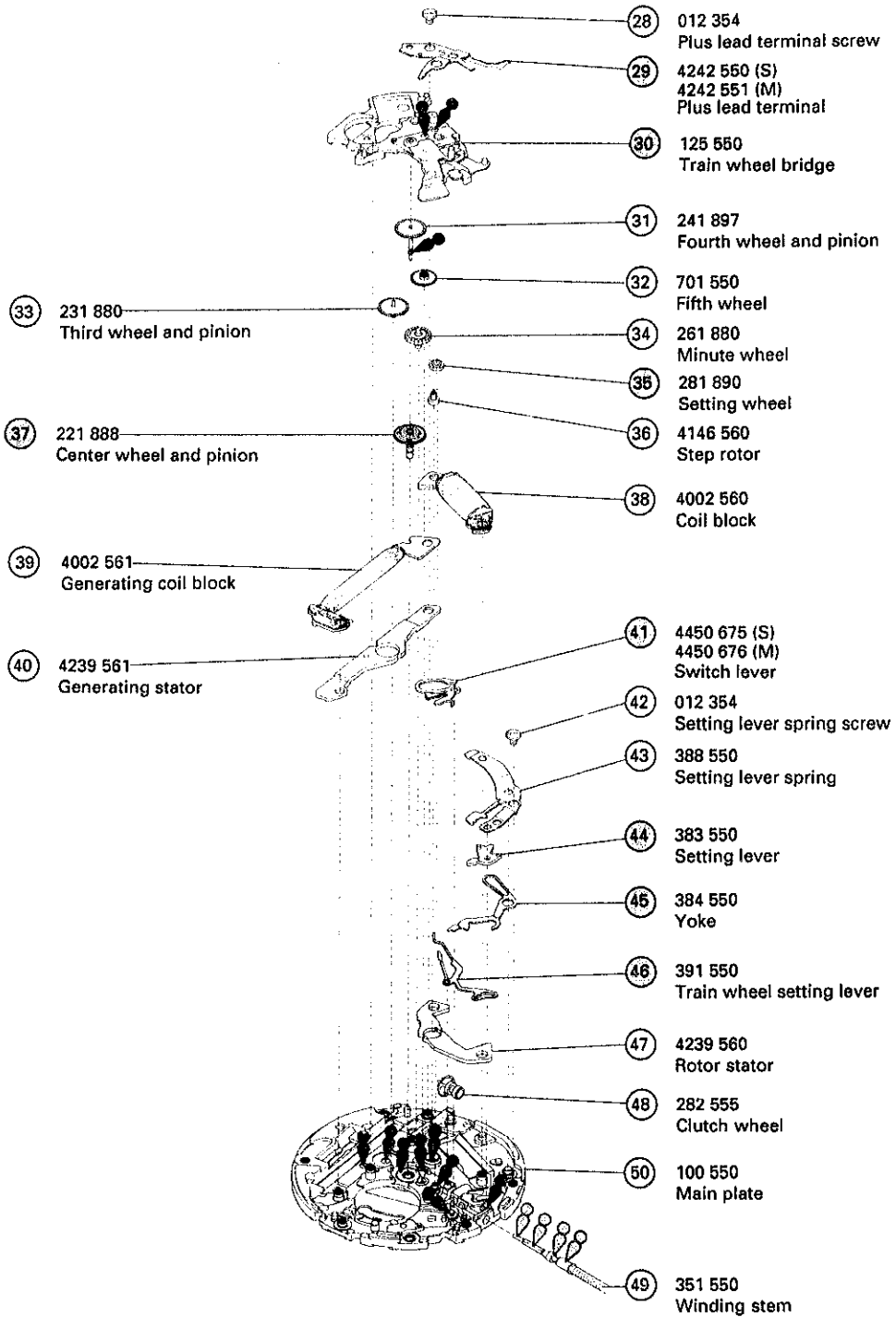

○ ⇨ Please see the remarks on the following pages.

Remarks:

(6) Date dial

Part code	Position of crown and calendar frame	Color of figure	Color of background
878 696	3 o'clock	Black	White
878 698	3 o'clock	White	Black
878 699	3 o'clock	Gold	Black
878 700	3 o'clock	Black	Gold

The type of date dial is determined based on the design of cases. Check the case number and refer to "SEIKO Casing Parts Catalogue" to choose a corresponding date dial.

- **Discrimination of case size**

Cal. 3M22 watches have letters on the dial to the right of the mark for hand installation height to indicate the case size.

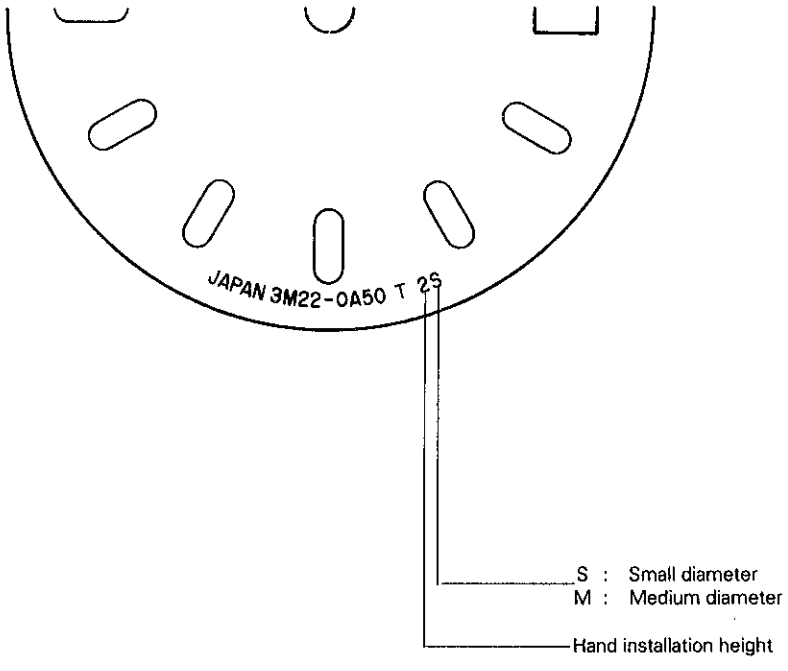

PARTS CATALOGUE

Cal. 3M22A

(29) Plus lead terminal

(41) Switch lever

These parts are determined by the case size. To choose the correct parts, check the letter for discrimination of case size on the dial and refer to the table below.

Discrimination		Plus lead terminal	Switch lever
Case size	Letter on the dial		
Small diameter	S	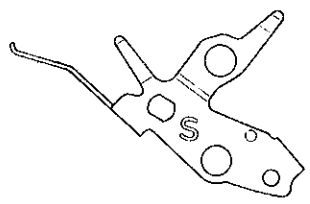 4242 550	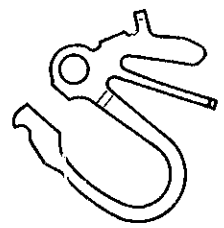 4450 675
Medium diameter	M	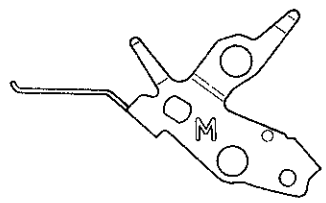 4242 551	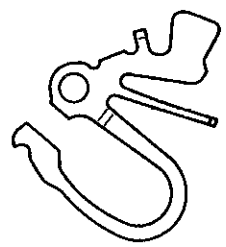 4450 676

TECHNICAL GUIDE

Cal. 3M22A

- The explanation here is only for the particular points of Cal. 3M22A.
- For the repairing, checking and measuring procedures, refer to the "TECHNICAL GUIDE, GENERAL INSTRUCTIONS".

I. STRUCTURE OF THE CIRCUIT BLOCK

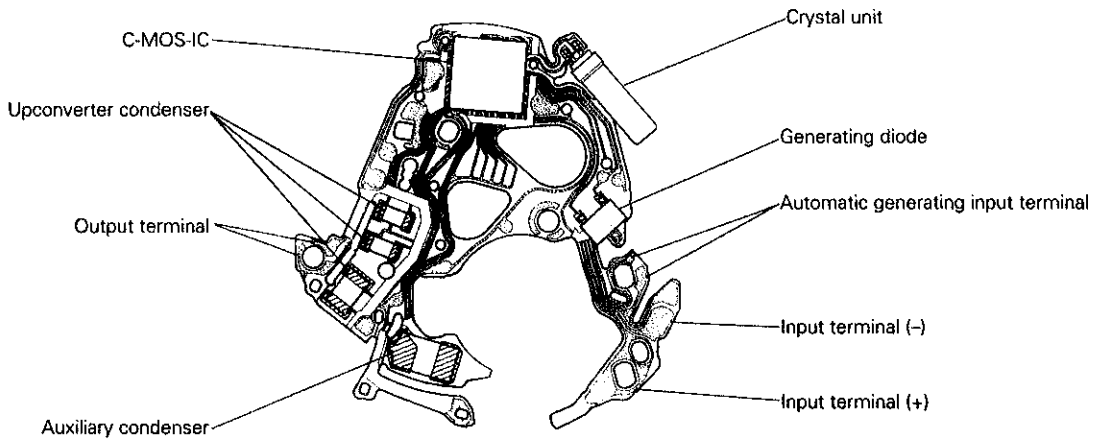

II. REMARKS ON DISASSEMBLING AND REASSEMBLING

(1) Hands

• How to install

Place the movement directly on the riveting plate shown in the illustration with the oscillating weight side down, so that the oscillating weight screw will not be damaged. Then, press in the hands.

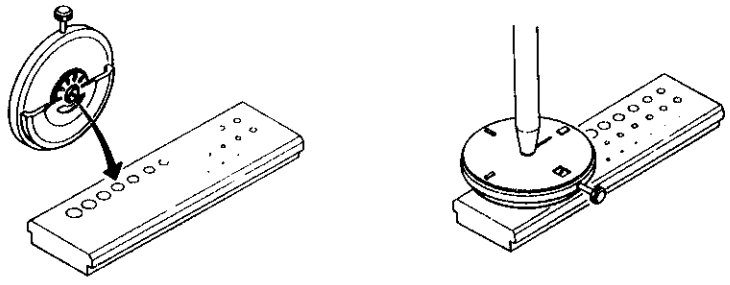

(19) Capacitor

• How to install

Set the guide hole of the capacitor connection (–) securely to the protrusion of the main plate, and then push the "A" portion of the capacitor so that it is fixed in position.

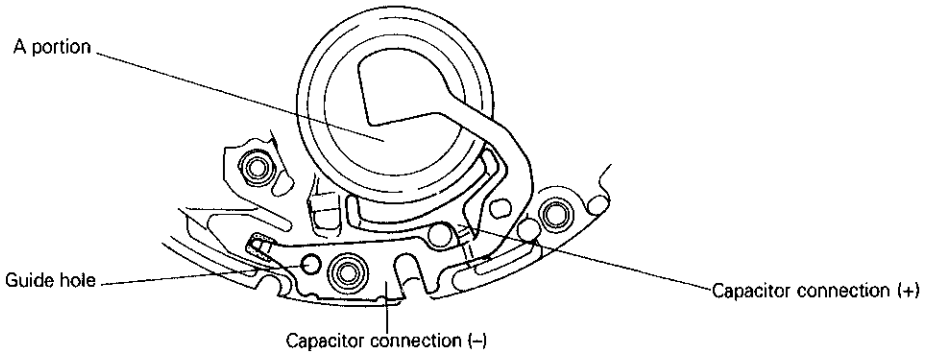

(23) Oscillating weight bridge

• Lubricating

Lubricate the ball-bearing of the oscillating weight bridge as shown in the illustration below.

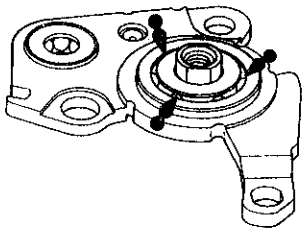

(25) Intermediate wheel for generating rotor

(26) Generating rotor

- **Lubricating**

Refer to the illustrations below.

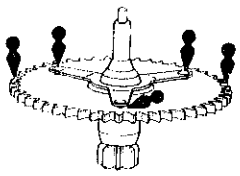

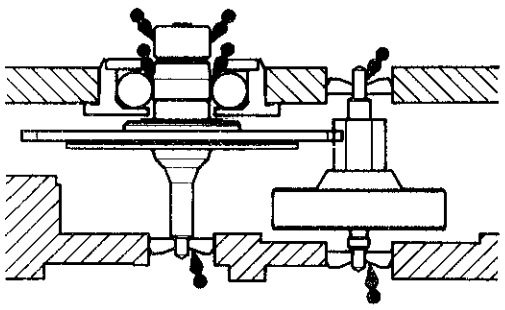

(30) Train wheel bridge

- **Setting position**

Before installing the wheels, refer to the illustrations below to check where to install the respective wheels.

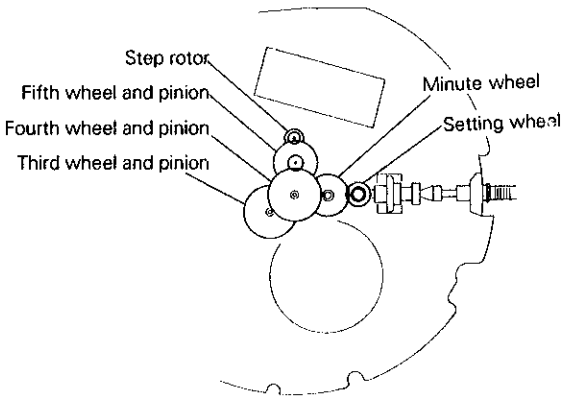

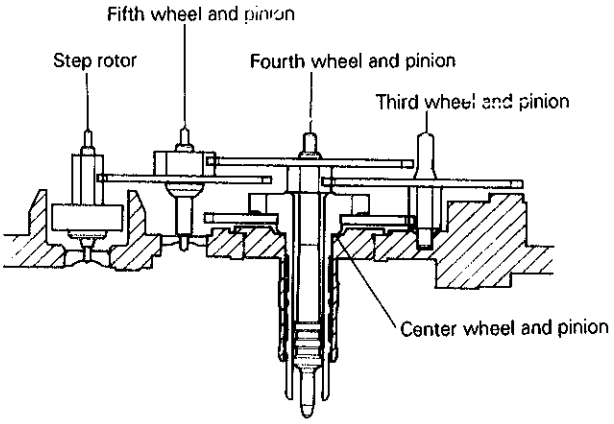

(35) Setting wheel

- **How to install**

Install the setting wheel in the direction as shown in the illustration below.

Dial side

Main plate side

(37) Center wheel and pinion

- **Lubricating**

Refer to the illustration at right.

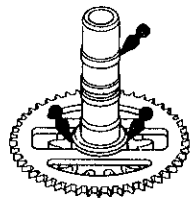

(44) Setting lever
(45) Yoke
(46) Train wheel setting lever

- **Setting position and lubricating**

Refer to the illustration below.

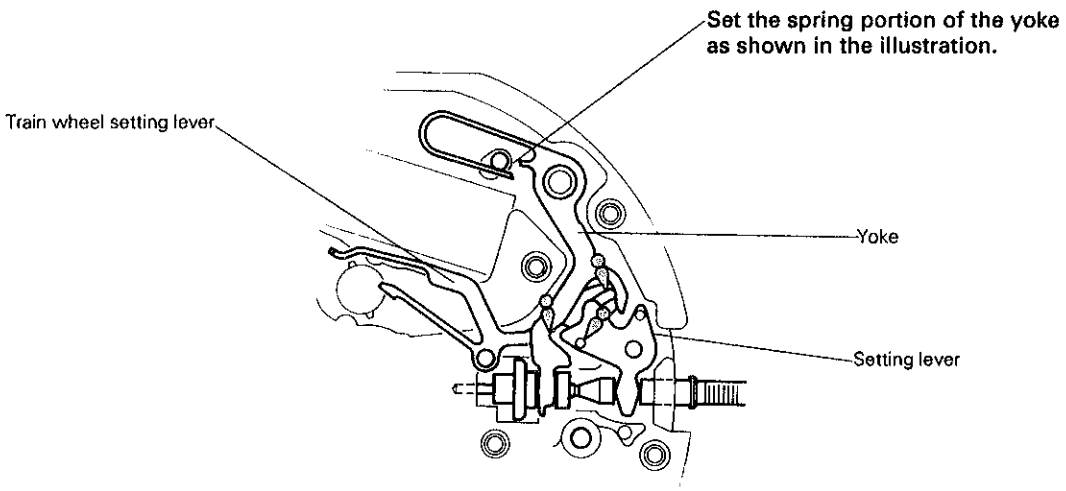

III. VALUE CHECKING AND ADJUSTMENT

- **Coil block resistance**

  2.4KΩ ~ 3.2KΩ

- **Generating coil block resistance**

  330Ω ~ 430Ω

- **Current consumption**

  For the whole movement : less than 0.8μA (with voltage supplied from a battery)
  For the circuit block alone : less than 0.4μA (with voltage supplied from a battery)

- **Measuring the current consumption for the whole movement**

  1) Connect the tester as shown in the illustration below.
  2) Start the measurement 30 to 40 seconds after connecting the tester, checking that a stable measurement is obtained.
  3) When measuring, look through the upper hole jewel for step rotor, to check that the step rotor is moving at one-second intervals.

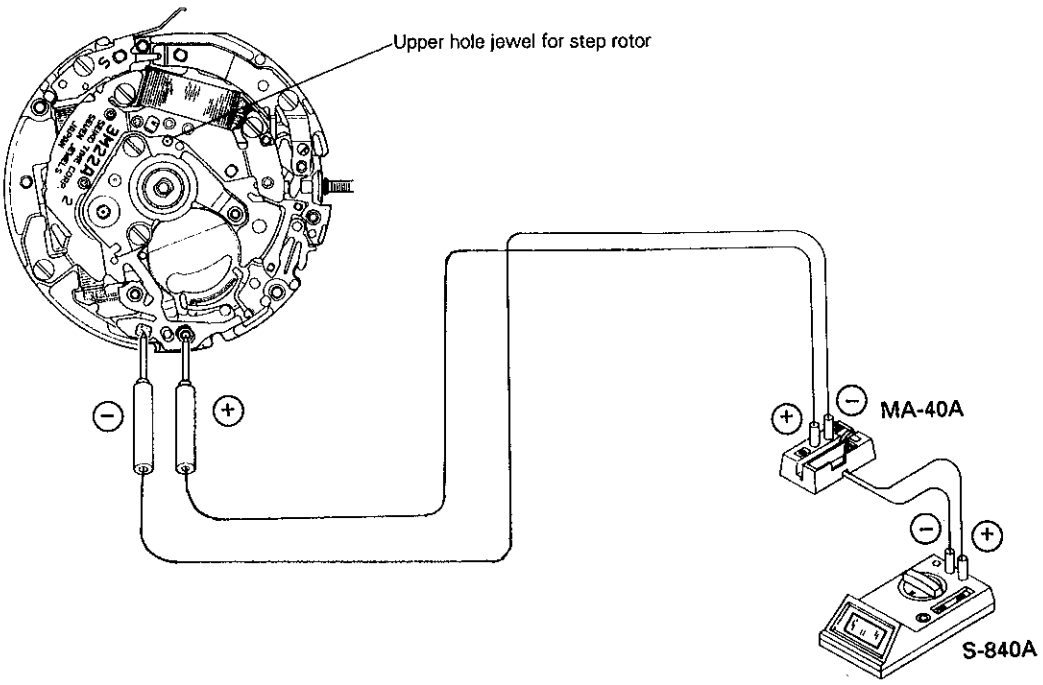

- **Measuring the current consumption for the circuit block alone**

  1) Start the measurement 30 to 40 seconds after connecting the tester in the same manner as you measure the current consumption for the whole movement.
  2) Before measuring the current consumption, cover the IC portion with black paper or the like to prevent the movement from being exposed to light, which may cause a higher reading than the actual measurement.

- **Checking the automatic generating system**

1) Remove the case back and apply the probes of the tester to the capacitor unit as shown in the illustration to measure the voltage.

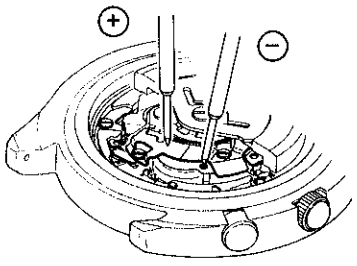

2) Close the case back, and swing the watch from side to side approximately 100 times rhythmically (at a rate of 2 to 3 times a second) with a snap of the wrist as shown in the illustration.

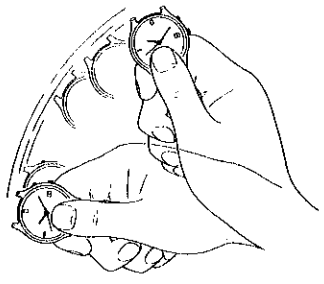

3) Open the case back, and measure the voltage of the capacitor unit in the same manner as in step 1) above. If the voltage obtained has increased more than 0.1V from the initial voltage, the automatic generating system is operating normally.

* To recheck the automatic generating system, leave the watch untouched for more than 5 minutes, and then repeat steps 1) to 3) above.

Recharging information: Number of swings required and the duration of charge until the watch stops operating

Cal. 3M22 Series watches are equipped with a power reserve indicator. The current power reserve can be checked using the second hand by pressing the button at the 2 o'clock position.

Number of swings	Quick movement of the second hand when the power reserve indicator function is activated	Duration of charge
100	5 seconds	Approx. 3 hours
500	10 seconds	Approx. 1 day
800	20 seconds	Approx. 2 days
1,200	30 seconds	Approx. 3 days

* The table above assumes that the initial voltage of the capacitor unit is 0.5V.